2016

1

2

3

4

5

1 R1

2 R1 2015 12 31

1 6.4936

R1

6,520 60% 2016 5 18 R1

520.38 312.23

520.38*60%

6,207.77 R1 6,207.77

6.4936 40,310.81

6 R1 60% 6,207.77 R1

7

8

[2012]37 3 -

[2013]43

9

[2015]31

10 R1 60%

2016 R1 2016-2018

2,500 2017 R1 2017-2019

3,000

R1

=

0

=

R1

200

30

R1

R1 R1

R1

R1

R1

R1

R1

R1

R1

R1

R1

R1

R1

R1

R1

R1

R1

2016 2016-2018 2,500

2017 2017-2019

3,000

[2016]113329

2016 5 31

16,184.77 2,880.36

-98,294.70 -21,648.05

2013 2015 9.83

..... 2
..... 3
..... 6
..... 6
..... 6
..... 7
..... 7
..... 7
..... 8
..... 8
..... 9
..... 14
..... 17
..... 17
..... 17
..... 21
..... 21
..... 22
..... 23
..... 24
..... 24
..... 25
..... 25
..... 26
..... 27
..... 29
..... 29
..... 30

..... 48
..... 49
..... 50
..... 51
..... 51
..... 51
..... 54
..... 54
..... 54
..... 55
..... 56
..... 61
..... 63
..... 63
..... 66
..... 66

..... 66
..... 66
..... 67
..... 67
R1 67
R1 67
R1 76
R1 78
R1 87
R1 90
..... 90
..... 91
..... 103

R1 109

..... 130

..... 130

..... 133

..... 134

..... 137

..... 146

..... 146

..... 147

R1 147

..... 153

..... 154

..... 156

..... 156

..... 158

..... 160

..... 160

..... 161

..... 161

..... 161

..... 161

..... 162

..... 162

..... 164

..... 164

..... 169
R1 173
R1 175
R1 **..... 197**
R1 197
..... 200
R1 **..... 205**

..... 205
R1 205
..... 208

..... 208
..... 209

..... 210

..... 210
..... 210
..... 211
..... 211

209.....

..... 230
..... 231
..... 232
..... 233

..... 233
..... 233
12 233
..... 233
..... 236
..... 240
..... 242

		56,261.78 A
		R1 60%
		R1
		2010 9
		2015 12
		HSF (S) PTE. LTD.
		Hainan State Farms Investment Limited R1 60%
R1		R1 International Pte Ltd. R1 60% 15%
		R1 60%
R1 America		R1 International (Americas) Inc. R1
R1 Japan		R1 International Japan Ltd. R1
R1Cambodia		R1 International Cambodia Pte.Ltd. R1

R1Vietnam		R1 International Vietnam Co., Ltd. R1
R1Malaysia		R1 International Malaysia Sdn Bhd. R1
R1Hwah Yang		Hwah Yang Agro Industries Sdn Bhd. R1
R1QVVietnam		Quoc Viet Rubber Co., Ltd. R1

		Pte. Ltd.
		Hainan State Farms Investment Limited R1 International Pte. Ltd.
		Hainan State Farms Investment Limited
		2013 2014 2015 2016 1-6
		2014 2015 2016 1-6

China Hainan Rubber Industry Group Co., LTD.

601118

3,931,171,600

103

http://www.hirub.cn/

86-898-31669317

1

2015 11

2020

2015 12

2

2015 11

3

2015

9.83 -0.25 /

353 200

1

353

200

19

2

A

A 1

20 90% 5.16 /

20 / 20

1

2

290,310.81

56,261.78

/

290,310.81

12

12

290,310.81

R1 R1

R1

R1 R1

R1

15% R1 60%

3,931,171,600 2,752,012,024 70%

2,771,488,234 70.50%

56,261.78

61.67%

2016 5 27

2015 6 8

[2016]1370

2016 6 15

N4600201600029

2016 6 15

[2016]67

2016 6 20 2016

2016 10 24

[2016] 734

2015 12 31

R1 60% R1 2015 12 31

2015 12 31 R1

10,829.85

		6
		R1 2016 2016-2018 2,500 2017 2017-2019 3,000

R1

R1

10

R1

290,310.81

1		134,961.17	100,000
2		202,382.17	150,000
3	R1	6,207.77 40,310.81	40,310.81
		377,654.15	**290,310.81**

1 R1

2 R1 2015 12 31

1 6.4936

R1

6,520 60% 2016 5 18 R1

520.38 312.23

520.38*60%

6,207.77 R1 6,207.77

6.4936 40,310.81

1

1

300

200

70

8-10

3

[2015]59

[2015]2 2016

2013 369.00 2014

417.14 11.04%

2

134,961.17

19 3 5 5 6

3

134,961.17

1		110,418.60	81.82%
1.1		49,020.00	36.32%
1.2		61,398.60	45.49%
2		18,185.59	13.47%
3		3,448.63	2.56%
4		2,908.36	2.15%
		134,961.17	100.00%

		I		
1.1.1		320	5,700.00	
1.1.2		1,300	22,800.00	
1.1.3		200	3,800.00	
1.1.4		650	12,350.00	

1.1.5		80	1,520.00	

1.1.6

	2,200	3	5
	2,000	3	3
	2,500	3.6	5
	2,800	2	6

1

		2	**3**	**4**		**15**
		1,980	9,900	19,800		33,000
		3,000	15,000	30,000		50,000
		-	-	540		18,000
		-	-	3,000		30,000
		-	-	1,500		37,500
		-	-	5,000		50,000
		2,800	8,400	16,800		33,600
		5,000	15,000	30,000		60,000
		4,780	**18,300**	**38,640**		**122,100**

2

			I	
1				21,484
1.1		50,000	1,877	9,384
1.2		50,000	60	300
1.3		50,000		
1.4		50,000		500
1.5	30	50,000	1,000	4,000
1.6		50,000		1,000
1.7		50,000		500
1.9		50,000		2,500

1.10		50,000	420	2,100

			/	
2				8,250
2.1		30,000	600	1,800
2.2		30,000	100	300
2.3	30	30,000	1,000	3,000
2.4		30,000	100	300
2.5		30,000	500	1,500
2.6		30,000	100	300
2.7		30,000	350	1,050

			/	
3				13,600
3.1		50,000	600	3,000
3.2		50,000	100	500
3.3	30	50,000	1,000	5,000
3.4		50,000	100	500
3.5		50,000	500	2,500
3.6		50,000	100	500
3.7		50,000	320	1,600

			/	
4				16,304.80
4.1		60,000	221	1,324.80
4.2		60,000	800	1,800.00
4.3		60,000	80	480.00
4.4	30	60,000	1,000	4,800.00
4.5		60,000	50	300.00
4.6		60,000	500	3,000.00
4.7		60,000	600	3,600.00

4.8		60,000	166	1,000.00

3

19,342.11

1,018.01 8.8 74,193.95

1

1

2015

40%

20%

2

2015 11

2020

30 8

25

200

71.36

3

353

13

32 / 6

8

2005

2015 7

100%

30%

1.3		768.30	1,012.60		-	**6,287.48**
1.3.1		396.90	396.54		-	**1,984.32**
1.3.2		-	244.67		-	**1,223.21**
1.3.3		-	-		-	**1,222.94**
1.3.4		326.40	326.40		-	**1,632.00**
1.3.5		45.00	45.00		-	**225.00**
2		497.45	748.76		367.73	**8,953.26**
3		704.41	1,067.33		309.97	**14,479.72**
		9,509.58	**14,408.97**		**4,184.55**	**195,476.17**

/

			2-3	**4**		
1		400	322	302	250	130
2		254	33	-	85	17
3		267	180	180	27	72
4		3	11	7	3	6
5		324	124	91	-	-
		1,248	670	580	365	225

4

8 9 25

33

			2023	2024	2025	2026	2027
1	2016	60,412					
2	2017	60,358					
3	2018	60,396					
4	2019	60,404					
5	2020	60,463					

5

23 60

60

15

1			
2			
3			
4			
5			
6			
7			
8			
9			
10			
11			
12			
13			
14			
15			
16			
17			
18			
19			
20			
21			
22			
23			

6

1

8 25

20

2.2 /

2024	2,416	5,316	-	5,316
2025	5,435	11,957	-	11,957
2026	9,058	19,929	-	19,929

	2024	2025	2026		2052
	7,590.02	14,976.79	22,446.61		7,285.49

2

R1

2014 R1

2015

67 2015 5.43%

2

1

2012 4

Hainan State Farms Investment Limited

R1 15% 60% R1

R1

R1

R1 60%

2

16.7%

90% R1 2015

67 R1

3

R1 R1

3

1

1

2016 5 27

2016 6 18 R1 60%

[2016]71

2016 6 20 2016

2

2016 5 27

R1 4,200,000 R1

60%

6,520

2

4

1

A

R1 60%

R1 75% R1

2

R1

R1

3

R1 60%

R1 60%

4

R1

75%

5

2015 12 31

6

R1 International Pte. Ltd.

[2016] 734

R1 60%

6,520

7

8

9

2016 5 27

1

Hainan State Farms Investment Limited

2016 5 27

2

2016 2016-2018

2,500 2017 2017-2019

3,000

3

=

=

5

1

R1 60%

2

R1 R1

3

2016 5 27

2015 6 8

[2016]1370

2016 6 15

N4600201600029

2016 6 15

[2016]67

2016 6 20 2016

2016 10 24

1

2

3

	China Hainan Rubber Industry Group Co., LTD
	460000000173123
	3,931,171,600
	2005 03 29
	601118
	103
	103

[2005]1

[2005]18

[2005]317

[2005] 020 2004 3 31

312,617.16

1,000

400 300 100

100 1 1 314,517.16

1

2005 3 21 [2005]

039 312,617.16 1,900

2005 3 25

2005 3 29

4600001010780 314,517.16

1		312,617.16	99.40%
2		1,000.00	0.32%
3		400.00	0.13%
4		300.00	0.10%
5		100.00	0.03%
6		100.00	0.03%
		314,517.16	**100%**

2009

[2009]3

[2008] 449

2008 9 30 1.50 /

6% 2009 8 7

18,000 6,000

6 2,000

2.98 3.06 8 11 9 4

1		294,617.16	93.67%
2		6,000.00	1.91%
3		2,000.00	0.64%
4		2,000.00	0.64%
5		2,000.00	0.64%
6		2,000.00	0.64%
7		2,000.00	0.64%
8		2,000.00	0.64%
9		1,000.00	0.32%
10		400.00	0.13%
11		300.00	0.10%
12		100.00	0.03%
13		100.00	0.03%
		314,517.16	**100%**

2010

[2010]1826 2010 12 27

78,600 2011 1 7

601118

393,117.16 A

È¼v8DNí½ËÐ-1o9DÞÑ

2		6,000.00	1.53%
3		2,000.00	0.51%
4		2,000.00	0.51%
5		1,947.62	0.50%
6		1,947.62	0.50%
7		2,000.00	0.51%
8		2,000.00	0.51%
9		973.81	0.25%
10		400.00	0.10%
11		300.00	0.08%
12		100.00	0.03%
13		97.38	0.02%
14		7,849.52	2.00%
15		78,600.00	19.99%
		393,117.16	**100%**

17 2016

289.70 6,650.1 223.18 4,691.2

66.52 1,958.9

2015 12

31 13 15

32 / 2.5 / 5

/

6 8

	2016 6	2015	2014	2013
	1,320,371.72	1,289,157.89	1,226,776.31	1,201,744.11
	530,644.00	476,473.10	316,599.09	280,861.84
	776,319.33	798,500.39	898,338.17	907,957.68
	789,727.72	812,684.79	910,177.22	920,882.27

	2016 1-6	2015	2014	2013
	374,313.35	840,012.15	1,119,867.17	1,169,473.29
	-19,879.69	-102,610.86	4,956.63	20,325.50
	-21,648.05	-98,294.70	2,880.36	16,184.77
	-21,634.85	-98,971.32	2,238.10	15,615.93

	2016 1-6	2015	2014	2013
	83,189.21	-23,792.97	-1,704.54	35,009.22
	-118,933.18	-87,034.00	-40,953.22	-40,127.50
	49,370.91	102,814.76	1,506.83	47,395.02
	13,544.17	-8,205.09	-41,354.01	42,051.12

/

	2016 1-6	2015	2014	2013
	-0.06	-0.25	0.01	0.04
	1.97	2.07	2.32	2.34
	0.21	-0.06	0	0.09

1

1

115 35-43

1992 12 01

400,000

460000000066159

2

1992 12 1

2010 9 27

1952 1

1988 3

1992 12 1

16

[2008]59 2008 1 1

2008 10 12

[2008]14

2010 8

[2010]8 2010 9

[2010]36

1

2

2011

3

2013 4

2010 9 27

16 40

3

2015 2016

	2016 6 30	2015 12 31
	1,001,332.56	861,290.06
	2,320,523.57	2,188,451.85
	755,607.91	762,615.24
	1,111,193.49	995,435.66
	1,209,330.08	1,193,016.19
	2016 1-6	**2015**
	679,997.28	1,647,366.17
	-32,051.47	-127,490.65
	-19,631.23	-104,747.40
	-24,402.34	-106,259.58

4

2016 6 30

		58%	10,000	
		90%	694.76	

		100%	5,000	
		90%	8,734.96	
		100%	5,000	
		100%	5,000	
		100%	5,000	
		100%	1,000	
		100%	28,000	
		84.01%	8,000	
		54.61%	4,120	
		99%	5,000	
		100%	3,000	
		100%	2,000	
		96.61%	2,950	
		100%	3,000	
		100%	5,000	
		80%	50,000	
		100%	10,000	
		51%	10,000	
		100%	7,000	
		100%	9,226	
		100%	5,108	
		100%	21,234.94	
		100%	5,000	

		100%	2,000	
		80%	100	
		100%	220	
R1		60%	700	
		100%	387	
		100%	1,000	
		100%	600	
		100%	2,100	
		100%	3,204	
		100%	500	
		51%	80	

2

115 42

2015 12 23

880,000

460000000300088

2016 6 30

2015 12 18

2016 5 31

2015 12 29

3

2016 6 30

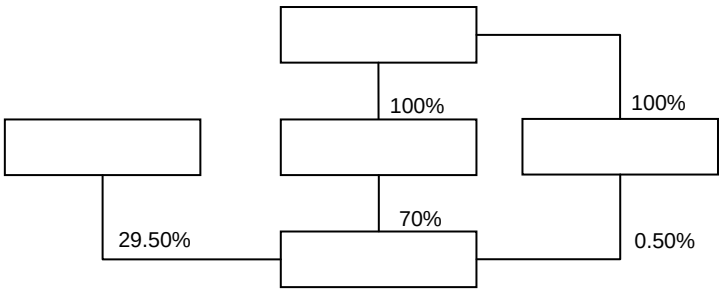

1

Hainan State Farms Investment Limited

limited private company

P.O. Box 957, Offshore Incorporations Centre, Road Town, Tortola, British Virgin Islands

2012 1 20

50,000

1692511

2

2012 1 20

				%
1		50,000	50,000	100
		50,000	**50,000**	**100**

3

4

	2016 6 30	**2015 12 31**	**2014 12 31**
	3,693.75	3,693.86	3,755.24

	3,040.35	3,044.98	3,304.82
	653.40	648.88	450.42
	82.31%	82.43%	88.01%
	2016 1-6	**2015**	**2014**
	0.00	0.00	0.00
	-0.10	198.45	349.52

5

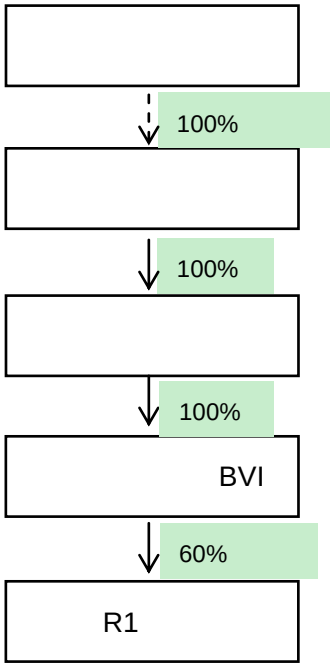

1

1

HSF (S) PTE.LTD.

Private Company Limited by Shares

9 Temasek boulevard#28-03 Suntec Tower Two Singapore

2012 1 13

2,000,001

201201190R

2012 1 13 1

100% 2012 6 6 200

2,000,001 100%

R1 60%

6,270.77 R1 2015 12 31

R1

R1 International Pte.Ltd.

Private Limited Company

8 Robinson Road #05-00 ASO Building Singapore

8 Robinson Road #05-00 ASO Building Singapore

7,000,000

2001 7 20

200104842R

R1

1 R1

2001 7 R1 Tan Siok Hwa Mabel Jude Philomen Benny 1 R1

Accounting and Corporate Regulatory Authority

R1

	/		
1	TAN SIOK HWA MABEL	1	50%
2		1	50%

	2	**100%**

2 2001 7

2001 7 R1 Tan Siok Hwa Mabel Jude

R1 R1 Holdings (L)

Incorporated R1

R1

	/		
1	R1 HOLDINGS (L) INCORPORATED	2	100%
		2	**100%**

3 2001 8

2001 8 R1 Holdings (L) Incorporated R1

500,000 R1

R1

	/		
1	R1 HOLDINGS (L) INCORPORATED	500,002	100%
		500,002	**100%**

4 2001 9

2001 9 R1 Holdings (L) Incorporated R1

499,998 R1

R1

	/		
1	R1 HOLDINGS (L) INCORPORATED	1,000,000	100%
		1,000,000	**100%**

5 2001 11

2001 11 R1 Holdings (L) Incorporated R1

6,000,000 R1

R1

	/		
1	R1 HOLDINGS (L) INCORPORATED	7,000,000	100%
		7,000,000	**100%**

6 2006 9

2006 9 R1 Holdings (L) Incorporated

R1 Mardec international Sdn. Bhd. Cargill Asia Pacific Ltd.

LLC Kian In Limited Thaveesak Holding Co., Ltd Sandana Dass 5

45.00% 25.00% 15.00% 10.00% 5.00% R1

R1

	/		
1	MARDEC INTERNATIONAL SDN. BHD.	3150,000	45.00%
2	CARGILL ASIA PACIFIC LTD. LLC	1750,000	25.00%
3	KIAN IN LIMITED	1,050,000	15.00%
4	THAVEESAK HOLDING CO. LTD	700,000	10.00%
5	SANDANA DASS	350,000	5.00%
		7,000,000	**100%**

7 2010 3

2010 3 Kian In Limited R1

Oei Hong Bie R1

R1

	/		
1	MARDEC INTERNATIONAL SDN. BHD.	3,150,000	45.00%
2	CARGILL ASIA PACIFIC LTD. LLC	1,750,000	25.00%
3	OEI HONG BIE	1,050,000	15.00%
4	THAVEESAK HOLDING CO. LTD	700,000	10.00%
5	SANDANA DASS	350,000	5.00%
		7,000,000	**100%**

8 2010 3

2010 3 Oei Hong Bie R1

Linda Oei Swan Chu R1

R1

	/		

1 MARDEC INTERNATIONAL SDN. BHD.

6	LIM BENG SENG	88,888	1.27%
7	LING CHAN YEW	88,000	1.26%
8	HO WAI LEONG	80,000	1.14%
	TOSHINOBU HANDA	50,000	0.71%

	/		
1		4,200,000	60.00%
2		1,050,000	15.00%
3	SANDANA DASS	700,000	10.00%
4	THAVEESAK HOLDING CO. LTD	410,000	5.86%
5	LIM BENG SENG	88,888	1.27%
6	LING CHAN YEW	88,000	1.26%
7	HO WAI LEONG	80,000	1.14%
8	R1 INTERNATIONAL PTE LTD	71,662	1.02%
9	TOSHINOBU HANDA	50,000	0.71%
10	CROSS COMMODITY INVESTMENT HOLDING CO. LTD.	40,450	0.58%
11	LEE CHEE HOE	40,000	0.57%
12	DUFOUR LORENZO PIETRO PAOLO	30,000	0.43%
13	OH KIAN CHEW	20,000	0.29%
14	LIM CHIN SENG	15,000	0.21%
15	LESLIE CHENG TSIN TZUN	13,000	0.19%
16	PEK TECK YEW	12,000	0.17%
17	CHIN SHEE YONG	12,000	0.17%
18	TRAN NGOC TUNG	12,000	0.17%
19	NGUYEN DAI THAO	10,000	0.14%
20	DING WEN	10,000	0.14%
21	WONG KIEN HIAN	8,000	0.11%
22	YEOH WEE CHIA	8,000	0.11%
23	CHIN CHI GANG	6,000	0.09%
24	THAD STEVEN GOFF	5,000	0.07%
25	MANTHA SRINIVAS SASTRY	5,000	0.07%
26	LIM CHIN CHAI	5,000	0.07%
27	FOO CHER HSIEN, SHAWN	4,000	0.06%
28	KORAVANGATTU VINAYRAJ	2,000	0.03%
29	STEPHEN KOH ENG TEONG	2,000	0.03%
30	LIZAM ABD. RAHMAN	1,000	0.01%
31	JOHN VALOORAN	1,000	0.01%
		7,000,000	**100%**

11 2013 1

2013 1 R1 Lizam Bin Abd Rahman Tran Ngoc Tung

26	FOO CHER HSIEN, SHAWN	4,000	0.06%
27	KORAVANGATTU VINAYRAJ	2,000	0.03%
28	STEPHEN KOH ENG TEONG	2,000	0.03%
29	JOHN VALOORAN	1,000	0.01%
		7,000,000	**100%**

12 2014 10

2014 10 R1 Lim Chin Chai

Chin Shee Yong 0.07% 0.17% R1

R1

	I		
1		4,200,000	60.00%
2		1,050,000	15.00%
3	SANDANA DASS	700,000	10.00%
4	THAVEESAK HOLDING CO. LTD	410,000	5.86%
5	R1 INTERNATIONAL PTE LTD	101,662	1.45%
6	LIM BENG SENG	88,888	1.27%
7	LING CHAN YEW	88,000	1.26%
8	HO WAI LEONG	80,000	1.14%
9	TOSHINOBU HANDA	50,000	0.71%
10	CROSS COMMODITY INVESTMENT HOLDING CO. LTD.	40,450	0.58%
11	LEE CHEE HOE	40,000	0.57%
12	DUFOUR LORENZO PIETRO PAOLO	30,000	0.43%
13	OH KIAN CHEW	20,000	0.29%
14	LIM CHIN SENG	15,000	0.21%
15	LESLIE CHENG TSIN TZUN	13,000	0.19%
16	PEK TECK YEW	12,000	0.17%
17	NGUYEN DAI THAO	10,000	0.14%
18	DING WEN	10,000	0.14%
19	WONG KIEN HIAN	8,000	0.11%
20	YEOH WEE CHIA	8,000	0.11%

21	CHIN CHI GANG	6,000	0.09%
22	THAD STEVEN GOFF	5,000	0.07%
23	MANTHA SRINIVAS SASTRY	5,000	0.07%
24	FOO CHER HSIEN, SHAWN	4,000	0.06%
25	KORAVANGATTU VINAYRAJ	2,000	0.03%
26	STEPHEN KOH ENG TEONG	2,000	0.03%
27	JOHN VALOORAN	1,000	0.01%
		7,000,000	**100%**

13 2015 10

2015 10 R1 0.04%

0.24% 0.29% Koravangattu Vinayraj Frans Andrew, De Jong

Leow Wei Chang 3 R1

R1

	I		
1		4,200,000	60.00%
2		1,050,000	15.00%
3	Sandana Dass	700,000	10.00%
4	Thaveesak Holding Co., Ltd	410,000	5.86%
5	LIM BENG SENG	88,888	1.27%
6	LING CHAN YEW	88,000	1.26%
7	HO WAI LEONG	80,000	1.14%
8	R1 INTERNATIONAL PTE LTD	61,662	0.88%
9	TOSHINOBU HANDA	50,000	0.71%
10	CROSS COMMODITY INVESTMENT HOLDING CO. LTD.	40,450	0.58%
11	LEE CHEE HOE	40,000	0.57%
12	DUFOUR LORENZO PIETRO PAOLO	30,000	0.43%
13	OH KIAN CHEW	20,000	0.29%
14	LEOW WEI CHANG	20,000	0.29%

15	FRANS ANDREW, DE JONG	17,000	0.24%
16	LIM CHIN SENG	15,000	0.21%
17	LESLIE CHENG TSIN TZUN	13,000	0.19%
18	PEK TECK YEW	12,000	0.17%
19	NGUYEN DAI THAO	10,000	0.14%
20	DING WEN	10,000	0.14%
21	WONG KIEN HIAN	8,000	0.11%
22	YEOH WEE CHIA	8,000	0.11%
23	CHIN CHI GANG	6,000	0.09%
24	THAD STEVEN GOFF	5,000	0.07%
25	MANTHA SRINIVAS SASTRY	5,000	0.07%
26	KORAVANGATTU VINAYRAJ	5,000	0.07%
27	FOO CHER HSIEN, SHAWN	4,000	0.06%
28	STEPHEN KOH ENG TEONG	2,000	0.03%
29	JOHN VALOORAN	1,000	0.01%
		7,000,000	**100%**

R1

R1

R1

R1

2013 3 2

1

1 2013 1

2013 1 R1 4,953.50 59,442 Lizam Bin Abd Rahman Tran Ngoc Tung 1,000 12,000 4.95

Lizam Bin Abd Rahman Tran Ngoc Tung Lizam Bin Abd Rahman Tran Ngoc Tung 3

2 2014 10

2014 10 R1 24,767.50 59,442 Lim Chin Chai Chin Shee Yong 5,000 12,000 4.95

Lim Chin Chai Chin Shee Yong Lim Chin Chai Chin Shee Yong 3

3 2015 10

2015 10 R1 25,230 139,575.44 168,200 Koravangattu Vinayraj Frans Andrew, De Jong Leow Wei Chang 3,000 17,000 20,000 8.41 8.21 8.41

Koravangattu Vinayraj Frans Andrew, De Jong Leow Wei Chang Koravangattu Vinayraj R1 Frans Andrew, De Jong R1 Leow Wei Chang R1 Frans Andrew, De Jong R1 Koravangattu Vinayraj Leow Wei Chang R1 2015 5 31

4

Lizam Bin Abd Rahman Tran Ngoc Tung Lim Chin Chai Chin Shee Yong Koravangattu Vinayraj Frans Andrew, De Jong Leow Wei Chang 5 R1

R1

R1

R1

5%

1

company 8,962,000 8,962,000 9 TEMASEK BOULEVARD #28-03 SUNTEC TOWER TWO SINGAPORE 200918102R

3 Sandana Dass

Sandana Dass 40 1974 -2001 Mardec International Sdn. Bhd. 2001 R1 Sandana Dass IRSG SICOM IRA

4 Thaveesak Holding Co., Ltd.

Thaveesak Holding Co., Ltd. 1996 6 7 0835539001608 2

Quoc Viet Rubber Co., Ltd.	100%	2		
R1 Delta CIS Pte. Ltd.	51%	1		
R1 Delta Polymers Pte. Ltd.	51%	2		
R1 International (India) Pvt Ltd.	100%	1		
PT Bintang Agung PersadaLtd.	60%	1		
R1 International (Thailand) Ltd.	100%	1		
RMLIB Rubber Company Pte. Ltd.	70%	1		
R1 International (Americas) Inc.	100%	1		

1 2 R1 Delta Polymers Pte., Ltd.51%

1

8 609

SANDANA DASS

100

2003 7 15

91310000752479966F

2

2 1 204

LEE CHEE HOE

200

2014 9 18

91370220395548811Q

3 R1 International Japan Ltd.

R1 International Japan Ltd.

6-1, Nakase 2-chome, Mihama-ku, Chiba-shi, Chiba, Japan

2,800

2001 10 1

0400-01-013236

4 R1 International Cambodia Pte. Ltd.

R1 International Cambodia Pte.Ltd.

No. 43, Village 11, Kompong Cham Commune,Kompong Cham City, Kompong Cham Province, Cambodia

5,000

2015 3 5

Co.0879E/2015

5 R1 International Vietnam Co., Ltd.

R1 International Vietnam Co., Ltd.

Ho Chi Minh City, Vietnam

25

2010 9 6

0310344385

6 R1 International Malaysia Sdn Bhd

R1 International Malaysia Sdn Bhd.

Suite 20B, Level 20, Sunway Tower, 86 JalanAmpang, 50450 Kuala Lumpur, WilayahPersekutuan

50

2001 8 29

557593-W

7 Hwah YangAgro Industries Sdn Bhd

Hwah Yang Agro Industries Sdn Bhd

No. 31, 1st Floor, RH Plaza Centre, Lane 1,Lapangan Terbang Road, 93250 Kuching,Sarawak

200

1999 12 9

500858-A

8 R1 Rubber Venture Pte. Ltd.

R1 Rubber Venture Pte.Ltd.

8 Robinson Road #05-00 ASO Building Singapore 048544

5,392,339

2014 4 8

201410155H

9 Quoc Viet Rubber Co., Ltd

Quoc Viet Rubber Co., Ltd.

Hamlet 01, Dong Tien Commune, Dong Phu District, Binh Phuoc province

100

2015 3 9

44.1043.000044

10 R1 Delta CIS Pte. Ltd.

R1 Delta CIS Pte.Ltd.

221 HENDERSON ROAD #08-15 HENDERSON BUILDING SINGAPORE 159557

100

2006 9 1

200612801W

11 R1 Delta Polymers Pte. Ltd.

R1 Delta Polymers Pte.Ltd.

221 HENDERSON ROAD #08-15 HENDERSON BUILDING SINGAPORE 159557

1

2014 5 9

201413437W

12 R1 International (India) Pvt. Ltd.

R1 International (India) Pvt. Ltd.

No.10-1, Old No 210/1, VanaraveeraSankirna, 5th Cross, Main,Jayanagar 2nd Block,Bangalore 560011, Karnataka, India

44,065,000

2004 9 1

CIN No U25199KA2004PTC034610

13. PT Bintang Agung Persada Ltd.

PT Bintang Agung Persada Ltd.

Jl. H. A. Roni No. 1306, RT.017/RW.006,Kelurahan 17 Ilir, Kecamatan Ilir Timur I,Palembang.

1,500

2013 7 29

14. R1 International (Thailand) Ltd.

R1 International (Thailand) Ltd.

No. 66-68-70 Niphat Uthit 1 Road, Hatyai Sub-District, Songkhla Province, Thailand.

1,000

2001 8 14

0905544001393

15 RMLIB Rubber Company Pte. Ltd.

RMLIB Rubber Company Pte.Ltd.

8 ROBINSON ROAD #05-00 ASO BUILDING SINGAPORE 048544

100

2013 5 30

201314463E

16 R1 International (Americas) Inc.

R1 International (Americas) Inc.

1209 Orange Street, City of Wilmington DE 19801

50

2012 10 2

5220964

R1

R1

R1

R1

R1

R1

R1 2014 2015 2016

R1

	2016 6 30	2015 12 31	2014 12 31
	113,603.21	129,895.19	121,159.43
	67,132.23	83,419.40	81,507.84
	46,470.97	46,475.79	39,651.59
	40,753.51	40,539.98	34,489.58

	2016 1-6	2015	2014
	250,457.26	647,948.93	861,953.06
	2,513.81	7,732.56	6,247.79
	2,567.76	7,907.88	5,668.14
	2,135.61	6,801.19	4,528.16
	2,285.99	6,895.02	4,169.42
	-2,507.62	2,518.15	12,925.22

	2016 1-6	2015	2014
	8,962.34	8,471.54	54,291.67
	-4,659.59	-10,287.43	-5,807.45
	-6,277.66	215.35	-56,096.21
	-1,551.16	-832.73	-7,671.87

	2016 6 30 / 2016 1-6	2015 12 31 / 2015	2014 12 31 / 2014
%	59.09%	64.22%	67.27%
%	7.01%	6.14%	2.40%
%	0.85%	1.05%	0.53%
%	1.88%	5.24%	3.74%
%	4.60%	14.63%	11.42%

	2016 1-6	2015	2014
	-	76.12	0.10
	-	-	-
	-	-	-
	-	-	-
	-	-	-
	-	-	-
	-	-	-
	-	-	-

	-	-	-
	-	-	-
	-	-	-
	-	-	-
	-	-	-
	-4,730.54	-4,458.62	8,976.71
	33.36	-	-
	-	-	-

R1

2016 6 30 R1 113,603.21

67,132.23

2016 6 30 R1

	13,787.05	
	2,486.40	
	20,721.50	
	36,994.94	-

2016 6 30 R1

R1

R1 Cargill Mardec

2001 R1 R1

R1

R1 2014

R1

R1

R1

R1

R1

2015 R1 65.24

Frost & Sullivan R1

IRSG 2015 1,234 R1 2015

5.29%

Ministry of Trade and Industry

International Enterprise Singapore

Singapore Customs

Inland Revenue Authority of

Singapore

Commodity Trading Act

Commodity Trading Regulations Securities and Futures Act

Relevant Free Trading Agreements

Trans-Pacific Partnership

R1

2014-2016 6 R1

	2016 1-6	2015	2014
	270,530.68	652,381.00	660,271.00
	2,161,64	1,258.53	-
	272,692.32	**653,639.53**	**660,271.00**

R1

1

2014-2016 6 R1

	2016 1-6	2015	2014
	250,457.26	647,948.93	861,946.90
	-	-	6.16
	250,457.26	**647,948.93**	**861,953.06**

2

2014 -2016 6 R1

	2016 1-6		2015		2014	
	7,214.97	18.90%	201,923.00	31.16%	273,817.85	31.77%
	7,065.43	18.51%	87,357.77	13.48%	124,238.85	14.41%
	5,987.43	15.69%	100,502.94	15.51%	101,707.54	11.80%
	3,252.77	8.52%	76,373.52	11.79%	81,014.25	9.40%
	2,462.79	6.45%	30,484.53	4.70%	19,919.29	2.31%

	1,973.19	5.17%	34,028.92	5.25%	67,788.48	7.86%
	10,208.92	26.76%	117,278.32	18.10%	193,460.57	22.44%
	38,165.50	100%	647,948.93	**100%**	861,946.89	**100%**

1

R1

Chief Executive

Officer CEO Chief Operation

Officer COO

COO

R1

R1

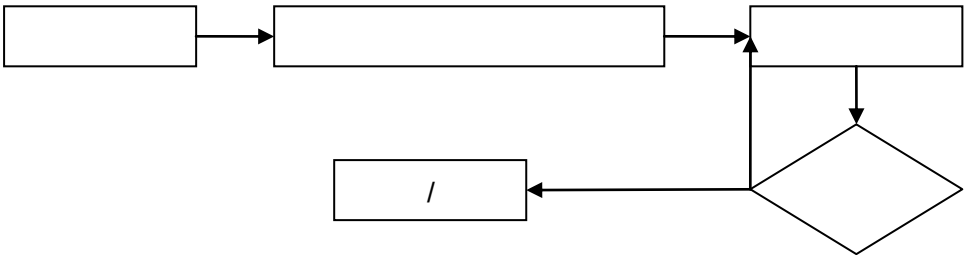

R1

R1

R1

2

R1 3

COO

CEO

CEO COO CEO COO

R1

	/	
HY	30,000	SMR20
QV	10,000	SVR3L SVRCV
	60,000	SIR20 SIR10

SMR20 20 SVR3L SVRCV
SIR20 SIR10 10 20

R1

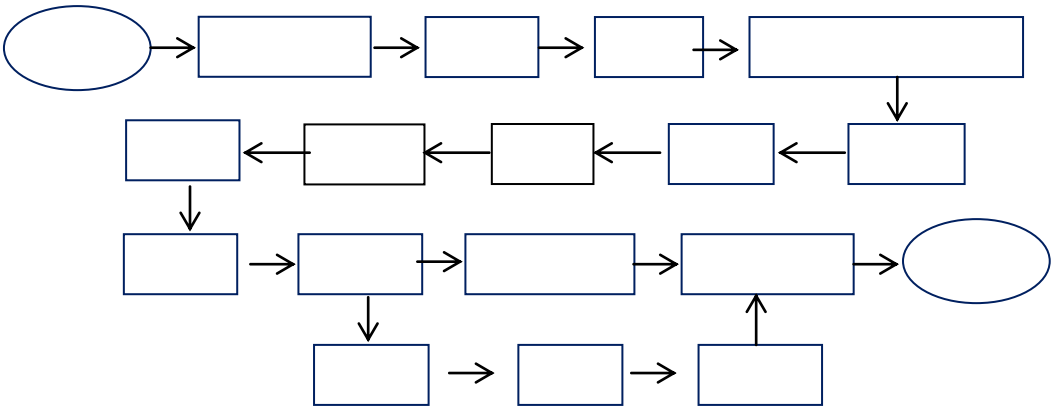

3

R1

R1

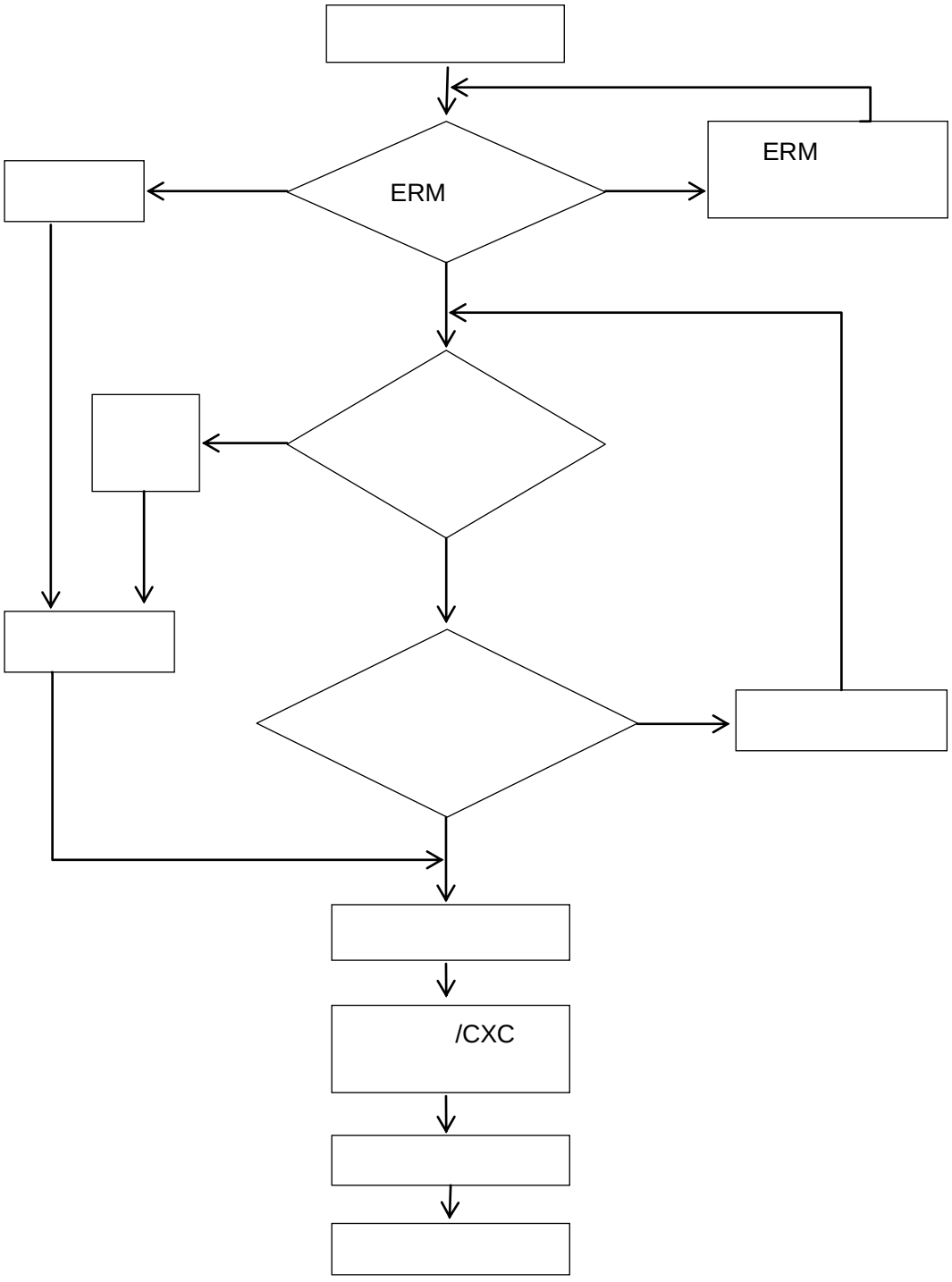

ERM CXC

R1

Average Price Fixed

Price Spot Price

4

R1 FOB CIF FOB

CIF

FOB+ +

R1 FOB

CIF

5

R1 R1

	2016 1-6	2015	2014
	60,285.06	159,265.85	200,747.43
	250,457.26	647,948.93	861,946.89
	24.07%	24.58%	23.29%

R1 50%

R1

R1

	2016 1-6	2015	2014
	61,730.06	160,463.21	234,392.41
	230,594.16	603,245.14	818,409.24
	26.77%	26.60%	28.64%

R1 50%

R1 Von

Bundit Co., Ltd. N. Polymer International Pte. Ltd. R1

Thaveesak Holding Co., Ltd. R1

R1 74,020.16 60,350.91

22,245.75 9.05% 10.01% 9.65%

R1 R1

R1

1

CEO

ERM

Enterprise Risk Management

ERM CFO CFO CEO

ERM

Exposure Limit Cut Loss Limit VAR Limit

CEO

CEO

CEO

CEO

ERM

1 Sandana Dass 1948 1973

1994 -2001 DASS MARDEC

MARDEC INTERNATIONAL SAN BHD

2011 Dass R1 CEO

Dass 40

2 Benson Lim 1967 Benson 1990

Cargill 2001 R1 2010

Benson 20

R1

3 Oh Kian Chew 1964 CFA Oh 1988 Cargill 2004 R1 2005 R1 2007 R1 2012 Oh R1

4 Leow Wei Chang 1976 CFA Leow 2000 -2007 2007-2009 Soya China Pte Ltd 2010-2014 Anchun International Holdings Limited 2014 R1 R1

5 William Ho Wai Leong 1976 Ho 2007 R1 2009 R1 Ho 15 1997

6 Ling Chan Yew 1972 Ling 1997 -2001 Cargill 2002 R1 2011 R1 R1 1972 Ling 18

7 Toshinobu Handa 1963 H Handa 1988 -1992 Okachi & Co., ltd. 1992 Cargill Japan Ltd. 1996 2001

23

9 Nguyen Dai Thao 1974 Thao 1997 Itochu Corporation (Japan) 1999 Cargill Incorporated 2001 R1 2010 R1 15

10 Mantha Srinivas Sastry 1975 Mantha 2001-2006 Delta Exports Pte Ltd. 2006 R1 R1 Delta CIS Pte Ltd. 14

1

16

2

2001 15

3

4

5

15

R1

2016 6 30 R1

	2,487.36	192.63	2,294.72	92.26%
	1,314.09	139.31	1,174.77	89.40%
	306.35	84.21	222.14	72.51%
	1,510.55	1,001.91	508.65	33.67%
	5,618.35	**1,418.07**	**4,200.28**	**74.76%**

2

2016 6 30 R1

1	R1	PENFIELD COMPANY LIMITED	8 Robinson Road, #05-00 ASO Building, Singapore 048544	2,411		2016.8.1-2018.7.31.
2	R1	PENFIELD COMPANY LIMITED	8 Robinson Road, #05-00 ASO Building, Singapore 048544	2,411		2015.12.1-2017.11.30
3	R1 India	Mr. M Krishnamurthy	No.10-1,Old No.210 /1,Vanaraveera Sankirna,5th 2nd Block,Bangalore 560011,Karnataka State,India	1,200		2016.7.1-2019.6.30
4	R1 India	Mr. N.V. Shenoy	4 th Floor, Shanmugham Road, Marine Drive,Ernakulam, 682 031, Kerala, India	1,700		2013.8.6-2022.8.6
5	R1 India	Mr. Sayaj Joseph and Mr. Jose James	Building No. NP XI- 264/D, Naduvil Panchayat, Asha Nagar, Karuvanchal P.O,Alakode (Via), Kannur District, 670 571,Kerala, India	2,000		2014.4.1-2019.4.1
6	R1 India	Mr. Sayaj Joseph and Mr. Jose	Building No. NP XI-264/C,E,F,G,I NaduvilPanchayat, Asha	5,736.63		2013.1.1-2018.1.1

		James	Nagar, Karuvanchal P.O,Alakode (Via), Kannur District, 670 571,Keral, India			
7	R1 India	Mr. K.P. Ramesh	Building No. N P 6/476, Thondy,Kootanpara, Nilambur, Re- Survey NO.446/1, Block No. 92, Malappuram District,Kerala, India	5,000		2011.10.15-2016.10.14
8	R1 India	Mr. K.P. Ramesh	Building No. N P 6/473, Thondy,Kootanpara, Nilambur, Re- Survey NO.446/1, Block No. 92, Malappuram District,Kerala, India	3,625		2016.1.1-2018.1.1
9	R1 India	Mr. K.P. Ramesh	Building No. N P 6/447, Thondy,Kootanpara, Nilambur, Re- Survey NO.446/1, Block No. 92, Malappuram District,Kerala, India	2,000		2015.8.1.-2020.8.1
10	R1 India	E.P. James and Subin James	Building No. VIII/565-C,KoovapaddyGrama Panchayath, Block No. Re.Sy. No.46/12-4 Koovapaddy Village India	10,700		2015.12.2-2018.12.2
11	R1 Vietnam	Zen Plaza Co.,Ltd	9th floor,54-55nguyen trai street ben thanh ward, district 1, hcmc,Vietnam	1700		2016.6.1-2019.5.31
12	R1 Malaysia	RHB Trustees Berhad	Suite 20b, 2oth sunway tower NO 86 jalanampang. 50450 kualalumpur, Malaysia	4,370		2016.11.14 2019.11.13
13	R1 America	LAD Enterprises, LLC	250 west main street charlottesvil, va 22902, America	1,730		2012.12.31-2016.12.31
14	R1 America	Elmdale Properties LLC	1207 gordonave Richmond va 23224, America	83,880		2016.5.1-2022.4.30
15	R1 Delta CIS	Delta Exports Pte Ltd	221 Henderson Road, #08-15 Henderson Building, Singapore 159557	200		2015.2.2-2017.2.2

1 10.76

R1 America

R1 America	Continental Terminals, Inc.	1023 cavalier bivd Chesapeake va 23323, America		150,000
R1 America	E.C.Colley Warehouse Corp.	1121 south Claiborne ave new Orleans la 70125, America		150,000
R1 America	I			

3	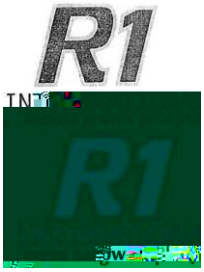		07016719	35	2017.8.24
4	R1 INTERNATIONAL R1 International		07016718	35	2017.8.24
5			013475645	1, 17, 35	2024.11.19
6	R1 INTERNATIONAL		013468954	1, 17, 35	2024.11.18
7			115866	35	2017.9.6
8			115867	35	2017.9.6
9	**R1 International**		115865	35	2017.9.6
10			IDM000201214	35	2017.10.23
11	R1 INTERNATIONAL		IDM000201213	35	2017.10.23
12			Bor43213	35	2018.1.6
13			Bor43214	35	2018.1.6

14		6414808	35	2021.10.6

R1

R1

R1

1

2016 6 30 2015 12 31 2014 12 31

2016 1 1 2016 6 30 2015 2014

2

1 1 12 31

3

4

( )

( )

( )

( )

( )

5

2015 12 31

6

7

8

(

)

1

2

(a)

(b)

1

2

3

4

1

2

3

4

(

)

( )

( )

( )

9

10

	10-25	4.00%-10.00%
	5-20	5.00%-20.00%
	4	25.00%
	3	33.37%

11

12

1

2

3

1

2

3

13

	25

14

15

( )

16

1

2

3

17

18

19

20

21

( )

22

1

1

17%

2

R1 International Malaysia Sdn. Bhd.

24% 2015 25% 2014 25%

Hwah Yang Agro Industries Sdn. Bhd.

24% 2015 25%

R1 International (Thailand) Ltd.

20%

R1 International Japan Limited

34% 2015 36% 2014 38.37%

R1 International Trading (Shanghai) Co. Limited R1 International (Qingdao) Co. Ltd. 25%

R1 International (India) Pte Ltd.

33.99%

R1 Delta CIS Pte Ltd. 17%

2015 10% 2014 10%

R1 Delta Polymers Pte Ltd. RMLIB Rubber Company Pte Ltd. R1 Rubber Ventures Pte Ltd. 17%

R1 International Company Limited Vietnam

20% 2015 22% 2014 22%

R1 International (Americas) Inc.

38%

PT Bintang Agung Persada

25%

R1 int Cambodia 22%

2

1

7%

2

R1 International Malaysia Sdn. Bhd. Hwah Yang Agro Industries Sdn. Bhd. 6%

R1 International (Thailand) Ltd.

7%

R1 International Japan Limited

5% 2014 4 1 8% 5%

R1 International Trading (Shanghai) Co. Limited R1 International (Qingdao) Co. Ltd. 17%

R1 International (India) Pte Ltd.

5%

R1 Delta CIS Pte Ltd. 7%

R1 International Company Limited Vietnam Quoc Viet Rubber Company Limited 5%

10%

PT Bintang Agung Persada

10%

3

4.5 Global Trader Programme (GTP) 2012

7 1 5%

2 10 GTP 2014 3 1

10%

17%

2014 17%

17% 2015

5% 10% 2015 1 1 2015

12 31

R1

60% R1

R1

2015 12 31 R1 60%

8,025.56 R1 60%

6,497.91

2015 12 31 R1 60%

6,497.91

1

2015 12 31

R1 100% 10,829.85

4,580.24 73.29%

				%

1

2

3

1

2

3

4

5

6

7

8

9

1

$$E = B - D - M \qquad (1)$$

E

B

$$B = P + C \quad (2)$$

P

$$P = \sum_{i=1}^{n} \frac{R_i}{(1+r)^i} + \frac{R_{n+1}}{r(1+r)^n} \quad (3)$$

Ri i

r

n

C

$$C = C_1 + C_2 \quad (4)$$

C1

C2

D

M

R= + + - 5

r WACC

$$r = r_d \times w_d + r_e \times w_e \quad (6)$$

Wd

$$w_d = \frac{D}{(E+D)} \quad (7)$$

We

$$w_e = \frac{E}{(E+D)} \quad (8)$$

rd

re CAPM re

$$r_e = r_f + \beta_e \times (r_m - r_f) + \varepsilon \quad (9)$$

rf

rm

$$\beta_e = \beta_u \times (1 + (1-t) \times \frac{D}{E}) \quad (10)$$

$$\beta_u = \frac{\beta_t}{1 + (1-t)\frac{D_i}{E_i}} \quad (11)$$

$$\beta_t = 34\%K + 66\%\beta_x \quad (12)$$

K K=1

Di Ei

2

P/E

P/E

= × PE×(1-

)

R1

R1

1

1

2014 R1 66.03 2015 65.24

3 1

3 2016 6

2

SGX

3

2014 2015

4.45%

	2016	2017	2018	2019	2020	2021
	109,099.90	119,625.65	132,823.92	145,395.60	159,480.49	159,480.49
	104,258.21	114,283.43	126,878.94	138,874.21	152,318.82	152,318.82
1-	101,591.00	109,077.00	120,806.00	131,788.00	143,567.00	143,567.00
	97,072.00	104,224.00	115,432.00	125,926.00	137,180.00	137,180.00
	690,000.00	730,000.00	770,000.00	800,000.00	830,000.00	830,000.00
/	1,472.33	1,494.20	1,568.91	1,647.36	1,729.72	1,729.72
/	1,406.84	1,427.73	1,499.12	1,574.07	1,652.78	1,652.78
	4.45%	4.45%	4.45%	4.45%	4.45%	4.45%

	5.81	6.38	7.08	7.75	8.50	8.50
	5.81	**6.38**	**7.08**	**7.75**	**8.50**	**8.50**

3

1

	2016	**2017**	**2018**	**2019**	**2020**	**2021**
	109,099.90	119,625.65	132,823.92	145,395.60	159,480.49	159,480.49
/	0.02	0.02	0.02	0.02	0.02	0.02
	2,636.56	2,861.65	3,141.14	3,408.34	3,706.52	3,706.52
	1,570.76	1,722.30	1,912.32	2,093.32	2,296.11	2,296.11
	420.33	460.88	511.73	560.16	614.43	614.43
	410.00	422.30	434.97	448.02	461.46	461.46
	118.60	130.05	144.39	158.06	173.37	173.37
	56.00	61.40	68.18	74.63	81.86	81.86
	30.79	33.76	37.48	41.03	45.01	45.01
	4.64	5.09	5.65	6.18	6.78	6.78
	4.46	4.89	5.43	5.95	6.52	6.52
	20.98	20.98	20.98	20.98	20.98	20.98

2

248.80.49

	2016	2017	2018	2019	2020	2021
	109,099.90	119,625.65	132,823.92	145,395.60	159,480.49	159,480.49
/	0.83%	0.81%	0.75%	0.71%	0.66%	0.66%
	908.07	971.68	1,001.44	1,030.65	1,058.99	1,058.99
	248.83	253.81				

4

5

R1

6

R1 17% 2014

2014 1 1 2016 12 31 GTP

10%

7

R1

R1 853.51

8

= + + -

R1

	2016	2017	2018	2019	2020
	108,139.14	118,453.77	131,359.19	143,651.62	157,422.76
	2,252.90	2,467.79	2,736.65	2,992.74	3,279.64
	4,171.11	4,572.19	5,076.11	5,556.01	6,093.89
	8,191.87	8,982.20	9,973.20	10,917.16	11,974.74
	4,143.36	4,541.78	5,042.34	5,519.05	6,053.36
	10,472.51	11,480.40	12,743.62	13,946.86	15,294.91
	732.05	1,007.89	1,263.22	1,203.24	1,348.05

9

	2016	2017	2018	2019	2020	2021
	109,099.90	119,625.65	132,823.92	145,395.60	159,480.49	159,480.49
	104,258.21	114,283.43	126,878.94	138,874.21	152,318.82	152,318.82
	5.81	6.38	7.08	7.75	8.50	8.50
	2,636.56	2,861.65	3,141.14	3,408.34	3,706.52	3,706.52
	908.07	971.68	1,001.44	1,030.65	1,058.99	1,058.99
	537.06	537.06	537.06	537.06	537.06	537.06
	754.19	965.46	1,258.27	1,537.59	1,850.60	1,850.60
	754.19	965.46	1,258.27	1,537.59	1,850.60	1,850.60
	114.87	194.58	254.14	311.42	375.49	375.31
	639.32	770.88	1,004.13	1,226.17	1,475.11	1,475.28
	128.84	166.97	166.97	166.97	166.97	166.97
	40.16	40.16	40.16	40.16	40.16	40.16
	455.25	428.81	428.58	428.28	428.09	428.14
	1,431.05	1,215.02	1,470.35	1,410.37	1,555.18	207.13
	732.05	1,007.89	1,263.22	1,203.24	1,348.05	-
	530.00	-	-	-	-	-
	169.00	207.13	207.13	207.13	207.13	207.13
	-167.47	191.80	169.50	451.21	555.14	1,903.42

1 r_f r_m

r_f=2.27% r_m=9.62%

2、βe

2013 1 2015 12

。

3 r_e

=0.04 r_e。

4 WACC

$r = r_d \times w_d + r_e \times w_e$

	2016	**2017**	**2018**	**2019**	**2020**	**2021**
	0.62	0.62	0.62	0.62	0.62	0.62
	0.38	0.38	0.38	0.38	0.38	0.38
	0.0450	0.0450	0.0450	0.0450	0.0450	0.0450
	0.0227	0.0227	0.0227	0.0227	0.0227	0.0227
	0.0962	0.0962	0.0962	0.0962	0.0962	0.0962
	0.1523	0.2015	0.2020	0.2025	0.2029	0.2028
	0.9170	0.9170	0.9170	0.9170	0.9170	0.9170
	0.9452	0.9452	0.9452	0.9452	0.9452	0.9452
	0.3423	0.3423	0.3423	0.3423	0.3423	0.3423
	0.5209	0.5105	0.5104	0.5103	0.5102	0.5103
	0.0400	0.0400	0.0400	0.0400	0.0400	0.0400
	0.1010	0.1002	0.1002	0.1002	0.1002	0.1002
	0.0381	0.0359	0.0359	0.0359	0.0359	0.0359
WACC	0.0770	0.0757	0.0757	0.0757	0.0757	0.0757

2015 12 31

1 C1

1

2,068

68

2

362.89

3

312.38

C1=118.51

2 C2

1

117.85 R1 ,R1 2015 3 23

100

2

65.57

3

38.38

C2=-90.66

4

C=C1+C2=27.85

907.55

12.7% 2014 58.73

7.83% 2015

-98.61

R1

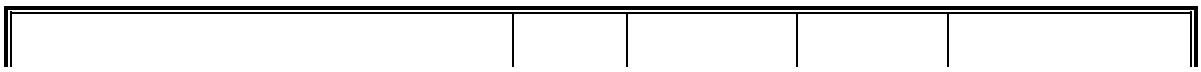

R1 100% 10,829.85

4,580.24 73.29% 13,375.94

7,126.32 114.03%

2,546.09 23.51%

P/E

R1 R1 R1 Delta CIS Pte Ltd 2,754,613 R1 International Co Ltd (Vietnam) 1,233,320 R1 International Trading(Shanghai) Co. Ltd. 4,619,933

R1 International Trading (Shanghai) Co. Ltd.

4,619,933

R1 R1 28,578,105 R1 International (Americas) Inc. 13,099,029 R1 Delta CIS Pte Ltd

5,621,809 Pt Bintang Agung Persada

1,500,000

Pt Bintang Agung Persada 6,923,000

R1

2014 10 1 R1

R1

R1

2015 12 31 R1

R1

R1

R1

R1 60%

R1

2016 734

1

R1

2

3

4

R1

R1

1

R1 100% 10,829.85 60%

6,497.91 6,520.00 R1

	2015	2016	2017	2018	2019
R1 60%	6,520.00				
R1 *60%	647.09	383.59	462.53	602.48	735.70
	10.08	17.00	14.10	10.82	8.86

1 = /

2 2016 -2019

2

A

1	600029.SH		100%	2015 6 30	40,057.04	3,985	**10.05**
2	000990.SZ		100%	2015 4 30	8,598.00	498.66	**17.24**
3	600365.SH		70%	2013 12 31	280.00	21.30	**18.78**
							15.36

R1 2015 10.08

15.36

A

					/	/	

1	600500.SH		Halcyon 30.07%	2015 6 30	13,532.97	1,202.75	**37.42**
2	600500.SH		GMG Global Ltd 51%	2008 7 10	26,793.22	2,207.17	**23.80**
							30.61

1 2015 12 31

Halcyon

R1

R1 2015 10.08 Halcyon

GMG

3

1

A

1

Wind 9

			2015 12 31	**2015 12 31**
1	000151.SZ		63.80	7.11
2	000159.SZ		34.68	2.09
3	000652.SZ		42.43	4.41
4	000906.SZ		85.55	5.66
5	600051.SH		36.01	1.98
6	600387.SH		58.63	4.87
7	000626.SZ		37.64	11.07
8	002091.SZ		46.79	6.10
9	600826.SH		27.44	3.66

	53.52	**5.22**
R1	**10.04**	**1.51**

Wind

1 2015 12 31 /2015
100

2 2015 12 31 /2015 12 31

3 R1 = /2015 *60%

R1 2015 10.09

53.52 R1 2015 1.51

5.22

2

A Halcyon Agri Corporation Limited Halcyon 2013

B Sri Trang Agro-Industry Plc Sri Trang

C Wilmar International Limited Wilmar

		2015 12 31
1	Halcyon	24.19

2	Sri Trang

1%	23,724.26	12,894.41	119.06%
0.5%	16,912.62	6,082.77	56.17%
	10,829.85	0.00	0.00%
0.5%	3,754.93	-7,074.92	-65.33%
1%	-9,294.34	-20,124.19	-185.82%

R1

R1

3

R 1 1

[2016]734

,

1

Hainan State Farms Investment Limited

2016 5 27

2

A

R1 60%

R1 75% R1

1 60%

2

R1

R1

10

R1

R1 60% R1

R1

R1 R1

R1

6

7

5%

5%

5%

Hainan State Farms Investment Limited

2016 5 27

R1

2012 R1

F F51

2011 2013

R1 60%

R1 50%

25%

4 10%

1 10% 2

R1 60%

R1

R1

R1 R1

2014 2015 2016

1-6 R1

[2014]010419

[2015]010607 [2016]170091 2016

170214 2013 2014 2015 2016 1-6

	2016 6	**2015**	**2014**	**2013**
	1,320,371.72	1,289,157.89	1,226,776.31	1,201,744.11

	555,575.74	42.08%	536,322.27	41.60%
	150,646.98	11.41%	133,861.21	10.38%
	1,588.66	0.12%	21,879.75	1.70%
	4,401.53	0.33%	12,366.60	0.96%
	51,723.12	3.92%	50,618.89	3.93%
	34,145.34	2.59%	58,100.84	4.51%
	25,797.16	1.95%	22,998.22	1.78%
	135,993.53	10.30%	187,876.84	14.57%
	146,214.80	11.07%	48,179.09	3.74%
	764,795.98	57.92%	752,835.62	58.40%
	6,991.65	0.53%	6,873.03	0.53%
	21,320.97	1.61%	21,622.77	1.68%
	1,644.56	0.12%	1,749.73	0.14%
	158,136.93	11.98%	155,412.60	12.06%
	16,877.45	1.28%	15,315.57	1.19%
	494,310.12	37.44%	486,320.31	37.72%
	38,641.54	2.93%	39,133.30	3.04%

	141,968.23	11.57%	223,052.86	18.56%
	33,223.02	2.71%	11,406.47	0.95%
	708,730.57	57.77%	653,589.22	54.39%
	6,550.09	0.53%	6,531.04	0.54%
	13,792.66	1.12%	13,759.81	1.14%
	1,807.31	0.15%	1,963.49	0.16%
	156,751.22	12.78%	149,623.31	12.45%
	14,444.41	1.18%	13,073.49	1.09%
	453,831.17	36.99%	425,762.43	35.43%
	38,602.81	3.15%	38,840.20	3.23%
	1,496.26	0.12%	1,496.26	0.12%
	1,440.30	0.12%	1,369.95	0.11%
	2,029.33	0.17%	1,169.23	0.10%
	17,911.61	1.46%	-	
	1,226,776.31	**100%**	**1,201,744.11**	**100%**

2016 6

1,320,371.72 2013 8.98%

54.39% 57.77% 58.40% 57.92%

2

	2016 6		**2015**	
	281,067.89	52.97%	304,364.94	63.88%
	97,760.23	18.42%	126,868.60	26.63%
	882.24	0.17%	6,467.25	1.36%
	35,000.00	6.60%	30,000.00	6.30%
	29,455.17	5.55%	36,244.60	7.61%
	21,165.02	3.99%	23,713.21	4.98%
	18,617.85	3.51%	24,584.08	5.16%

	40,844.31	7.70%	39,896.66	8.37%
	18,130.64	3.42%	10,766.68	2.26%
	249,576.11		172,108.16	36.12%

	30.24%	24.74%	17.31%	16.09%
	2016 1	**2015**	**2014**	**2013**
	-1.52	-8.40	1.62	9.98

= / = /

= / = + /

2.16 1.75 1.76 1.98

1.28 1.27 1.14 1.49

16.09% 17.31% 24.74%

30.24%

9.98 1.62

-8.40 -1.52

2015

	2016 1-6	**2015**	**2014**	**2013**
	374,313.35	840,012.15	1,119,867.17	1,169,473.29
	-32,908.96	-115,529.20	-9,509.27	8,735.56
	-19,879.69	-102,610.86	4,956.63	20,325.50
	-21,648.05	-98,294.70	2,880.36	16,184.77
	-21,634.85	-98,971.32	2,238.10	15,615.93

1,169,473.29 1,119,867.17

840,012.15 374,313.35

16,184.77 2,880.36 -98,294.70

-21,648.05 10,000 /

IRSG 2015 1,234 R1 2015
5.29%

1

1

[2007]10

2015 80
60 2013 2011
< 2011
>

2

40%

10,000 /

1

1

70%

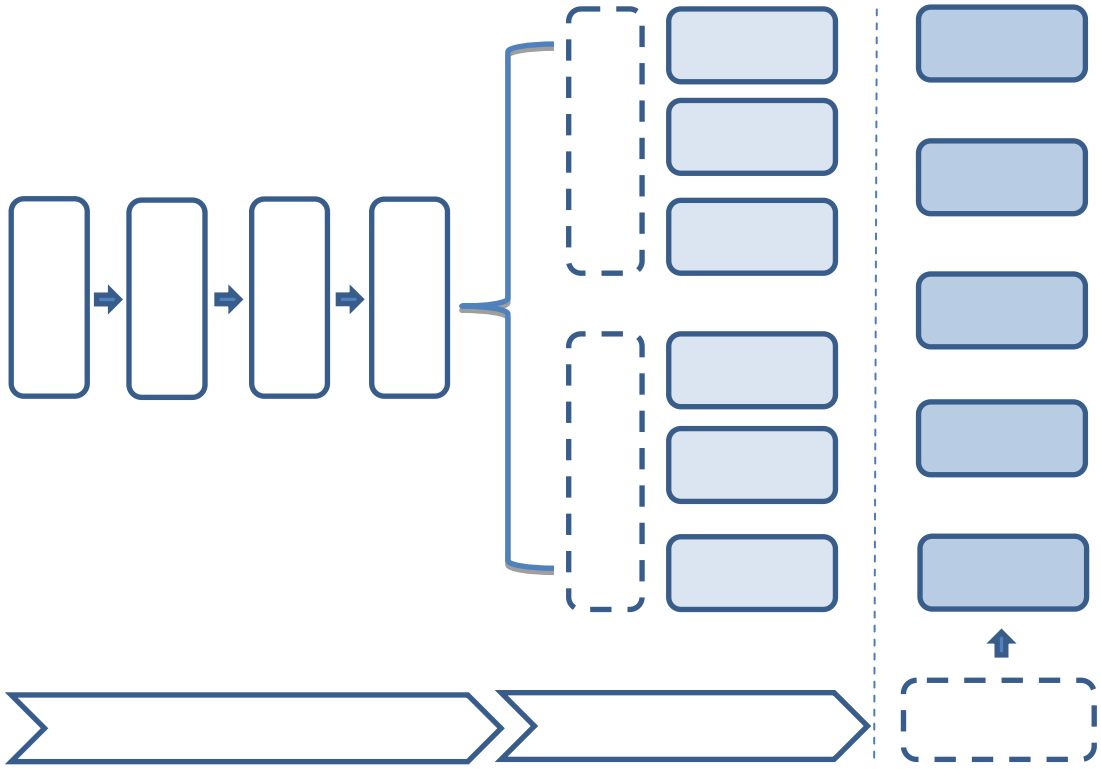

2

3

20%

-

2015

1 1 20% 1,500

/ 25%

R1

1

R1

16

R1

R1

R1

2

R1 2001 15

R1

R1

3

R1

R1

R1

R1 R1

4

R1

R1

5

R1

R1

15 R1

IRSG 2014 2015 1,210
1,234 R1 66.03 65.24
5.46% 5.29% Frost & Sullivan R1

R1

1

R1

2016 6 30 2015

	14,159.00	12.46%	9,369.65	7.21%	2,492.68	2.06%
	5,814.36	5.12%	5,542.39	4.27%	6,060.89	5.00%
	362.44	0.32%	208.64	0.16%	-	-
	320.15	0.28%	425.76	0.33%	55.05	0.05%
	24,856.23	21.88%	19,555.36	15.05%	8,804.93	7.27%
	113,603.21	**100%**	**129,895.19**			

1

R1 14,039.71 13,428.77

11,655.82 12.50% 12.17%

13.13%

en-US

	2016 6		2015		2014	
	16.23	0.14%	29.16	0.22%	5.30	0.04%
	11,639.59	99.86%				

	250,457.26	647,948.93	861,953.06
	13.21%	5.98%	5.37%

R1 46,301.31 38,773.92

33,084.46 5.37% 5.98% 13.21% R1

B.

	2016 6	**2015**	**2014**
1	33,068.10	38,752.40	46,309.86
1	483.08	504.80	447.77
	466.72	483.28	456.32
	33,084.46	**38,773.92**	**46,301.31**

R1 1

46,309.86 38,752.40 33,068.10

C.

	2016 6	**2015**	**2014**
	13,787.05	29,492.27	29,730.41
	33,084.46	38,773.92	46,301.31
	41.67%	76.06%	64.21%

R1

R1

29,730.41 29,492.27

13,787.05 64.21% 76.06% 41.67%

D.

	2016 6	**2015**	**2014**

4,087.92	14,126.11	6,108.00	
33,084.46	38,773.92	46,301.31	
12.36%	36.43%	13.19%	

R1

14,950.00 9,900.00

11,550.00 R1 6,108.00

14,126.11 4,087.92

5

	2016 6		2015		2014	
1	1,807.01	89.33%	2,232.92	91.36%	1,414.52	100%
1	215.74	10.67%	211.27	8.64	-	-
	2,022.75	**100%**	**2,444.19**	**100%**	**1,414.52**	**100%**

R1 1,414.52 2,444.19

2,022.75 1.26% 2.22% 2.28%

6

	2016 6		2015		2014	
	87.55	0.81%	185.45	1.63%	8.39	0.10%
	10,593.74	97.45%	10,844.81	95.45%	8,418.94	95.69%
	189.37	1.74%	331.97	2.92%	370.74	4.21%
	10,870.66	**100%**	**11,362.23**	**100%**	**8,798.07**	**100%**

R1 8,798.07 11,362.23

10,870.66

8,418.94 10,844.81 10,593.74 95.69%

95.45% 97.45% R1

2016 6 R1

7

	2016 6		2015		2014	
	232.10	0.99%	0	0.00%	0	0.00%
	24,358.48	103.41%	27,376.30	109.27%	28,504.77	100.73%
	1,035.74	4.40%	2,322.24	9.27%	207.17	0.73%
	23,554.84	**100%**	**25,054.06**	**100%**	**28,297.60**	**100%**

R1 28,297.60 25,054.06
23,554.84 25.19% 22.71% 26.54% R1
2015 R1
2016 6
232.10

8

	2016 6	2015	2014
	531.98	781.83	1,164.41
	1,609.66	1,574.62	407.95
	2,141.64	**2,356.44**	**1,572.36**

R1 2015
2014

2

R1

	2016 6 30		2015		2014	
	4,200.28	16.90%	4,008.92	20.50%	196.31	2.23%

	14,159.00	56.96%	9,369.65	47.91%	2,492.68	28.31%
	5,814.36	23.39%	5,542.39	28.34%	6,060.89	68.84%
	362.44	1.46%	208.64	1.07%	-	-
	24,856.23	**100%**	**19,555.36**	**100%**	**8,804.93**	**100%**

R1

2015 R1

1

R1 196.31 4,008.92

4,200.28 2.23% 20.50%

16.90%

A.

R1

	2016 6		**2015**		**2014**	
	2,487.36	44.27%	2,321.05	45.03%	-	-
	1,314.09	23.39%	1,157.68	22.46%	-	-
	306.35	5.45%	275.16	5.34%	153.37	14.06%
	1,510.55	26.89%	1,401.06	27.18%	937.37	85.94%
	5,618.35	**100%**	**5,154.95**	**100%**	**1,090.74**	**100%**

R1 1,090.74 5,154.95

5,618.35

2015 Quoc Viet Rubber Co., Ltd. Hwah YangAgro Industries Sdn Bhd

B.

2016 6 R1

	2,487.36	192.63	-	2,294.72
	1,314.09	139.31	-	1,174.77
	306.35	84.21	-	222.14
	1,510.55	1,001.91	-	508.65
	5,618.35	**1,418.07**	**-**	**4,200.28**

R1 2016 6 74.76% R1

2

	2016 6	**2015**	**2014**
	14,159.00	9,369.65	2,492.68
	14,118.96	9,369.65	2,492.68
	40.04	-	-
	-	-	-
	14,159.00	9,369.65	2,492.68

R1

3

	2016 6	**2015**	**2014**
	6,262.97	5,847.90	6,142.80
	448.61	305.51	81.9
	5,814.36	5,542.39	6,060.89

R1 R1

5,814.36 5,542.39 6,060.89

68.84% 28.34% 23.39% 2014 R1

Quoc Viet Rubber Co., Ltd. Hwah YangAgro Industries Sdn Bhd

2015 2014 518.51

129.99

4

512.94	0.76%	39.33	0.05%	1,395.29	1.71%
1,069.98	1.59%	1,868.02	2.24%	1,553.32	1.91%
2,611.04	3.89%	-	-	-	-
3,139.27	4.68%	3,508.17	4.21%	2,865.81	3.52%
781.47	1.16%	765.26	0.92%	721.11	0.88%
1,325.54	1.97%	1,481.74	1.78%	4,193.71	5.15%
59,331.03	**88.38%**	**78,674.68**	**94.31%**	**81,288.61**	**99.73%**
7,661.34	11.41%	4,495.52	5.39%	-	-
139.86	0.21%	249.20	0.30%	219.23	0.27%
7,801.20	**11.62%**	**4,744.72**	**5.69%**	**219.23**	**0.27%**
67,132.23	**100%**	**83,419.40**	**100%**	**81,507.84**	**100%**

R1

R1

2016 6		**2015**		**2014**	
0,354.85	51.16%	37,499.48	47.66%		

79.22% 76.83% 81.41%

1

R1 31,880.74 37,499.48

30,354.85 39.22% 47.66%

51.16% R1

R1

R1

3

	2016 6	2015	2014
	68.87	1,038.99	1,167.14

R1 1,167.14 1,038.99

68.87 1.44% 1.32% 0.12%

4

	2016 6	2015	2014
	17,943.88	22,944.89	32,514.45

4.79

2014
2,865.81
-

	2016 6		2015		2014	
	7,661.34	98.21%	4,495.52	94.75%	-	-
	7,801.20	**100%**	**4,744.72**	**100%**	**219.23**	**100%**

R1 0 4,495.52 7,661.34

0% 94.75% 98.21%

+3.75%

3

R1

	2016 6	2015	2014
	1.50	1.40	1.38
	1.10	1.08	1.03
	59.09%	64.22%	67.27%
	2016 1-6	**2015**	**2014**
	4.71	5.77	4.25
	2,800.12	8,319.78	5,772.65

= / = /

= / = + /

R1 1.38 1.40 1.50

1.03 1.08 1.10 R1

	0.51	1.29	-

R1 3.81 1.74

6.07 2.58 1.29 0.51

R1

2016 1-6 2015

	20.90	-621.88	358.74

1

	2016 1-6		2015		2014	
	250,457.26	100%	647,948.93	100%	861,946.90	100%

250,457.26

		841,225.56	-	841,225.56
		20,721.34	**6.16**	**20,727.50**

R1 20,727.50 39,777.77

17,556.05 R1

R1

2

	2016 1-6	**2015**	**2014**
	7.01%	6.41%	2.40%
	7.01%	6.41%	2.40%

R1 2.40% 6.41% 7.01%

2.40% 6.41% 7.01% 2014

2015 2016 1-6 R1

R1

4

R1

	2016 1-6		**2015**		**2014**	
	9,211.32	3.96%	17,343.61	2.85%	18,352.12	2.18%
	2,349.07	1.01%	5,155.46	0.85%	4,668.19	0.55%
	100.53	0.04%	2,965.96	0.49%	1,946.54	0.23%
	11,660.92	5.01%	25,465.03	4.19%	24,966.85	2.97%
	232,901.21	100%	608,171.17	100%	841,225.56	100%

R1 24,966.85 25,465.03

11,660.92 2.97% 4.19%

5.01% 18,352.12

17,343.61 9,211.32

4,668.19 5,155.46 2,349.07

1,946.54 2,965.96 100.53 2016

1-6

5

1

	2016	1-6	2015	2014

R1 4,227.43 -4,490.68

1,118.78

R1

29,704.22 35,319.15

15,063.07 2015 2014 5,614.93 18.90%

3

	2016 1-6	2015	2014
	98.22	**237.05**	**200.08**
	98.22	116.07	180.76
	-	76.12	0.10
	-	76.12	0.10
	-	44.86	19.22
	44.27	**61.74**	**779.73**
	44.27	57.76	59.92
	-	3.98	-
	-	-	719.81
	53.95	**175.31**	**-579.65**

R1 200.08 237.05

98.22 779.73

61.74 44.27

R1

6

1

	2016 1-6	2015	2014
	2,513.81	7,732.56	6,247.79

	2,567.76	7,907.88	5,668.14
	2,135.61	6,801.19	4,528.16
	2,285.99	6,895.02	4,169.42

R1 6,247.79 7,732.56

2,513.81 4,528.16 6,801.19 2,135.61 2015

R1 2014 2,273.03 50.20% 2015

R1

	-	-	-
	-	-	-
	-4,730.54	-4,458.62	8,976.71
	33.36	-	-
	-	-	-

R1

	2016 1-6	2015	2014
	8,962.34	8,471.54	54,291.67
	-4,659.59	-10,287.43	-5,807.45
	-6,277.66	215.35	-56,096.21
	423.75	767.82	-59.88
	-1,551.16	-832.73	-7,671.87

R1 -7,671.87

-832.73 -1,551.16

R1 54,291.67

8,471.54 8,962.34 2015

2014

R1 -5,807.45

-10,287.43 -4,659.59

R1 -56,096.21

215.35 -6,277.66 2014 2016 1-6

R1

R1

R1 2014 2015 2016 1-6

(2016) 61230935_B02

R1

R1 2014 12 31 2015 12 31 2016 6 30

2014 2015 2016 6 30 6

R1 2014 2015 2016 1-6

	2016 6 30	2015	2014

	30,354.85	37,499.48	31,880.74
	1,518.39	9,528.81	4,997.03
	68.87	1,038.99	1,167.14
	17,948.68	22,944.89	32,514.45

	4.70	34.53	2.42
	9,211.32	17,343.61	18,352.12
	2,349.07	5,155.46	4,668.19
	100.53	2,965.96	1,946.54
	-1,353.93	2,087.03	-1,512.85
	-3,611.76	32.06	4,749.29
	-1,118.78	-4,490.68	4,227.43
	2,513.81	**7,732.56**	**6,247.79**
	98.22	237.05	200.08
	-	76.12	0.10
	44.27	61.74	779.73
	-	-	-
	2,567.76	**7,907.88**	**5,668.14**
	432.15	1,106.69	1,139.97
	2,135.61	**6,801.19**	**4,528.16**
	2,285.99	6,895.02	4,169.42
	-150.38	-93.83	358.74
	1,513.73	**909.16**	**194.07**
	3,649.34	**7,710.35**	**4,722.24**
	3,628.44	8,332.23	4,363.50
	20.90	-621.88	358.74

	2016 1-6	**2015**	**2014**
	257,400.74	656,751.94	904,487.92
	98.22	158.07	75.92
	257,498.96	**656,910.01**	**904,563.85**
	242,961.80	637,976.54	840,116.96
	3,005.54	4,405.48	5,241.88
	1,120.58	892.04	875.58
	1,448.70	5,164.42	4,037.76
	248,536.62	**648,438.48**	**850,272.18**

	8,962.34	**8,471.54**	**54,291.67**
	-	76.33	0.10
	-	4.48	388.51
	-	**80.81**	**388.61**
	4,659.59	8,596.84	6,196.06
	-	1,740.40	-
	-	31.00	-
	4,659.59	**10,368.24**	**6,196.06**
	-4,659.59	**-10,287.43**	**-5,807.45**
	4,219.94	4,535.30	-
	-	210.02	-
	4,219.94	**4,745.32**	**-**
	8,813.96	-	50,181.03
	1,683.63	4,529.97	5,863.75
	-	-	51.44
	10,497.60	**4,529.97**	**56,096.21**
	-6,277.66	**215.35**	**-56,096.21**
	423.75	**767.82**	**-59.88**
	-1,551.16	**-832.73**	**-7,671.87**
	13,206.98	14,039.71	21,711.58
	11,655.82	**13,206.98**	**14,039.71**

2016 1-6 2015 2014

2016 170218

2016 6 30 2015 12 31

2014 12 31 2016 1-6 2015 2014

	2016 6	2015
	162,302.80	147,289.98
	7,005.48	38,799.97
	4,401.53	12,366.60
	84,807.58	89,392.81
	36,168.09	60,545.03
	28.38	0.00
	598.38	0.00
	26,074.09	23,515.64
	159,548.36	212,930.90
	-	0.00
	4,437.84	440.83
	158,950.18	61,380.34
	644,322.71	**646,662.10**
	1,275.00	1,275.00
	0	0.00
	0	41.45
	21,320.97	21,622.77
	1,644.56	1,749.73
	162,337.21	159,421.52
	31,036.45	24,685.22
	494,310.12	486,320.31
	44,455.90	44,675.68
	2,073.72	1,704.91
	1,668.61	1,271.47
	7,433.87	8,193.66
	16,379.16	15,831.25

	783,935.56	**766,792.96**
	1,428,258.28	**1,413,455.06**
	128,115.08	164,368.08
	2,400.63	15,996.06
	35,000.00	30,000.00
	47,403.85	59,189.49
	21,677.96	23,752.54
	18,686.71	25,623.07
	3,020.40	4,122.38
	662.01	476.29
	2,088.83	0.00
	43,983.58	43,404.84
	16,600.00	3,093.20
	19,456.18	12,248.41
	339,095.24	**382,274.37**
	243,192.68	165,176.85
	0.00	0.00
	0.00	0.00
	781.47	765.26
	13,606.64	11,283.58
	578.00	392.44
	0.00	0.00
	258,158.79	**177,618.14**
	597,254.03	**559,892.50**
	400,929.33	400,929.33
	362,771.25	364,589.25
	370.73	429.95
	35,600.57	35,600.57
	1,891.35	22,037.28
	801,563.23	823,586.38

	29,441.02	29,976.17
	831,004.25	**853,562.56**
	1,428,258.28	**1,413,455.06**

	2016 1-6	**2015**
	622,894.42	**1,481,256.80**
	622,894.42	1,481,256.80
	645,836.81	**1,601,549.90**
	590,660.32	1,432,034.84
	144.62	561.02
	17,288.22	49,269.86
	27,398.05	61,807.17
	7,077.97	15,067.01
	3,267.63	42,809.99
-	2,204.38	-909.10
-	-9,657.14	13,037.87
	256.58	597.25
-	0	0.00
-	**-30,395.15**	**-108,164.33**
	13,862.97	15,195.93
	184.65	451.03
	779.74	2,102.27
	112.20	779.12
-	**-17,311.93**	**-95,070.68**
	2,200.51	-3,209.48
-	**-19,512.44**	**-91,861.20**
	-20,145.93	-94,167.75
	633.49	2,306.55
	-59.22	**655.64**
	-59.22	655.64
	0	0.00

1.	0	0.00
2.	0	0.00
	-59.22	655.64
1.	0	0.00
2.	0	0.00
3.	0	0.00
4.	-629.25	24.34
5.	570.03	631.30
	0	0.00
	-19,571.66	**-91,205.57**
	-20,205.15	-93,512.11
	633.49	2,306.55
/	-0.05	-0.23
/	-0.05	-0.23

R1

R1

R1

R1

R1

	R1
	R1
Thaveesak HoldingsCo., Ltd.	R1
N. Polymer International Pte. Ltd. N. Polymer	Thaveesak HoldingsCo., Ltd.
Von Bundit Co., Ltd. Von Bundit	Thaveesak HoldingsCo., Ltd.
Lyon Rubber Ltd.	R1
Delta Export Pte. Ltd.	R1

		2016 1-6	**2015**	**2014**
Von Bundit		3,398.19	595.49	0.25
		1,876.18	6,156.16	-
N. Polymer		732.38	3,063.09	9,325.25
		-	-	13,710.97

	-	**6,006.76**	**9,814.75**	**23,036.47**
	-	2.40%	1.51%	2.67%

R1

23,036.47 9,814.75 6,006.76 2.67%

1.51% 2.40%

R1 Von Bundit

Von Bundit

184.20 / R1

Von Bundit Thaveesak Holding Co., Ltd R1

5.86% Von Bundit R1

Von Bundit R1

R1

		2016 1-6	**2015**	**2014**
Von Bundit		22,103.99	59,804.04	73,352.15
		168.02	-	1,184.58
N. Polymer		141.76	546.87	668.01
Lyon Rubber Ltd.		-	-	25.61
Delta Export Pte Ltd.		106.7	205.08	106.04
	-	**22,520.46**	**60,555.99**	**75,336.39**
	-	9.77%	10.04%	9.21%

R1

75,336.39 60,555.99 22,520.46

9.21% 10.04% 9.77%

		2016 1-6	**2015**	**2014**

		-	-	14.17
Delta Export Pte. Ltd.		7.24	9.30	12.04
		2,968.87	2,913.47	-
		36.88	89.19	-

R1 Delta Export Pte. Ltd.

12.04 9.30 7.24 0

2,913.47 2,968.87 0 89.19 36.88

4.85%

R1

		2016 6	**2015**	**2014**
	N. Polymer	202.03	89.67	667.91
	Lyon Rubber Ltd.	0.02	-	0.02
		-	-	411.18
		202.05	**89.67**	**1,079.11**
	Von Bundit	2,638.00	153.33	3,331.10
		169.78	-	-
	Delta Export Pte Ltd.	1.08	0.25	30.48
	N. Polymer	-	-	370.44
		2,808.86	**153.58**	**3,732.02**

R1

R1 R1

3,931,171,600

2,752,012,024 70%

2,771,488,234

70.50%

56,261.78

61.67%

R1

R1

70%

61.67%

R1 R1

R1

R1 R1

8

2009

1

2015 9,000-15,000 /

-9.83 1.12%

2

2008

[2008]850 2008

R1 R1

R1

R1

200 30

R1

R1

1

R1

30

R1

2

R1

R1

R1

3

R1

4

1

R1

R1

R1

2

1

2

R1

R1

3

R1

R1

4

R1

R1

5

R1

R1

R1

6

R1 R1

R1

R1

R1

R1

R1

7

2016 2016-2018 2,500

2017 2017-2019

3,000

8

9

R1

R1

[2016]113329

2016 5 31

16,184.77 2,880.36

-98,294.70 -21,648.05

2013 2015 9.83

[2012]37 3

[2013]43

2013

30%

1

30%

2

3 70%

1

2 E

3

4

5

1

2

2013	166,235,627.61	1,096,318,990.16	10 0.2 78,623,432.00
2014	44,259,171.50	1,057,528,821.51	10 0.02 7,862,343.20

1 2013

2013 2013

2013 12 31 3,931,171,600 10

0.20 78,623,432.00

2 2014

2014 2014

2014 12 31 3,931,171,600 10

0.02 7,862,343.20

2016-2018

1

2 2016 12

3 56,261.78

4 290,310.81

5

6 2016 =2016

+2016 - +

290,310.81

7 2016

2016

8

9

2016 2016

2015 50% 1 2014

2016 2015 50%

	2015	2016	
	393,117.16	393,117.16	449,378.94
	-98,917.32	-49,458.66	-49,458.66
	898,338.17	798,500.39	798,500.39
	798,500.39	749,041.73	1,039,352.54
/	-0.32	-0.16	-0.16
/	-0.32	-0.16	-0.16
	-11.66%	-6.39%	-6.39%

2016 1

	2015	2016	
	393,117.16	393,117.16	449,378.94
	-98,917.32	-10,000.00	-10,000.00
	898,338.17	798,500.39	798,500.39
	798,500.39	788,500.39	1,078,811.2
/	-0.32	-0.03	-0.02
/	-0.32	-0.03	-0.02
	-11.66%	-1.26%	-1.26%

2016 2014

	2015	2016	
	393,117.16	393,117.16	449,378.94
	-98,917.32	2,238.10	2,238.10
	898,338.17	798,500.39	798,500.39
	798,500.39	800,738.49	1,091,049.30
/	-0.32	-0.09	-0.09

/	-0.32	-0.09	-0.09
	-11.66%	0.28%	0.28%

2015 11

2020

2

2015 11

2015

3

2015

9.83 -0.25 /

353

200

1

2015

484 40%

82.99 16.7%

90% R1

R1

2012 4

R1 15% 60% R1

R1

R1

R1 60%

2

353 200

19

3

200 30

R1

R1

300

R1

R1

R1

3

2016-2018

1

2

3

4

5

6

R1

2016 2016-2018

2,500 2017 2017-2019

3,000

2016

[2016]170218 2016 6 30

	40.19%	41.82%
	1.98	1.90
	1.49	1.43
/	42.08%	45.11%
/	57.92%	54.89%
/	52.97%	56.78%

12

12

www.cninfo.com.cn

1

2

3

4

5

[2012]37 3

[2013]43

2013

1

2

3

4

5

6

1

2

7

8

2013	166,235,627.61	1,096,318,990.16	10 0.2 78,623,432.00
2014	44,259,171.50	1,057,528,821.51	10 0.02 7,862,343.20
2015	-	-	

2016-2018

3 --

2016-2018

1

168 29

2

6001 12

3

1

169 2-9

2

1 17 01-12

4

28 F4

1

2

1

26 2014

2

3

4

5

6 R1 60% R1

R1 15%

7

2016

2016 10 24